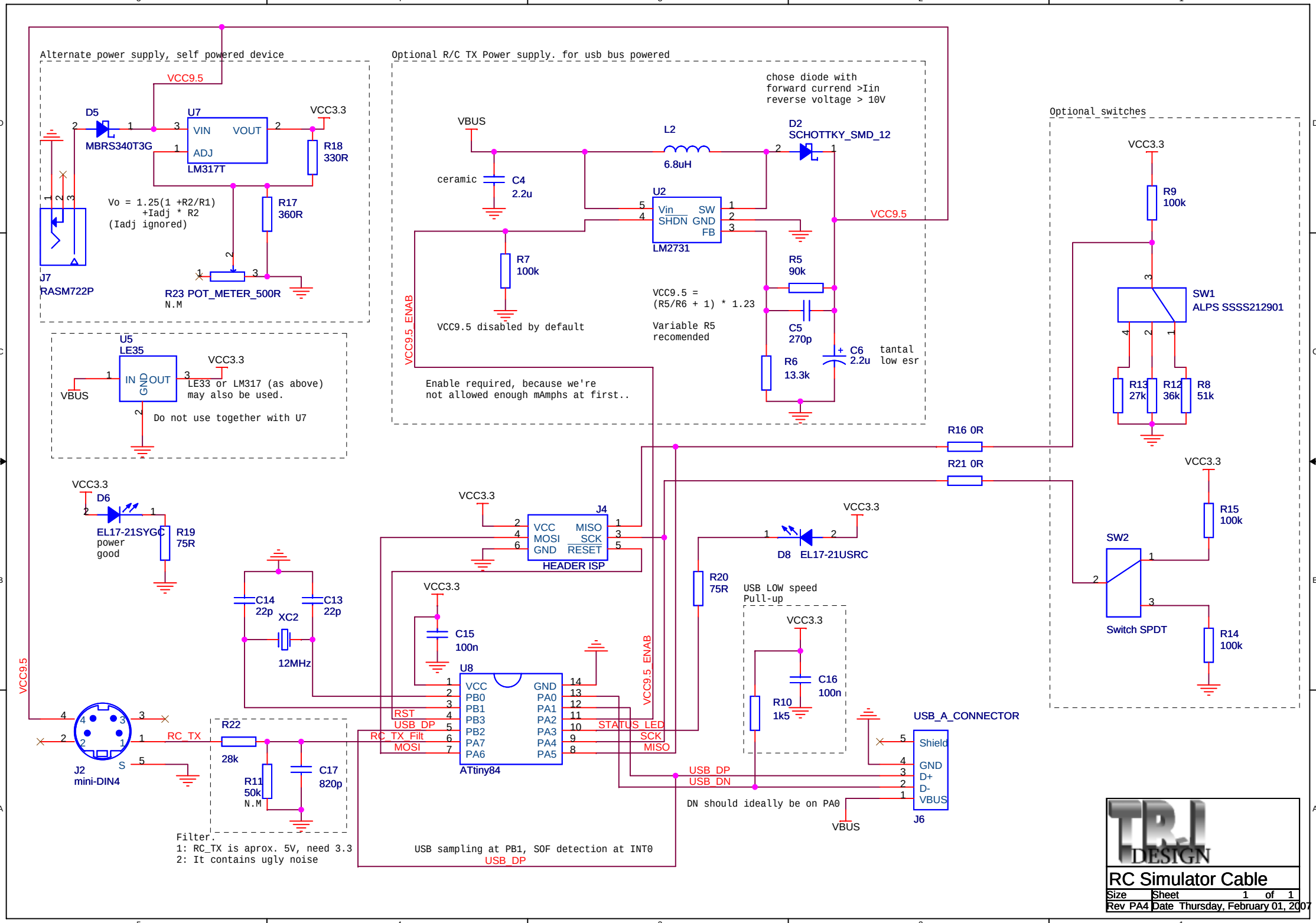
Alternate power supply, self powered device
VCC9.5
D5
MBRS340T3G
U7
VIN
VOUT
ADJ
LM317T
VCC3.3
R18
330R
R17
360R
Vo = 1.25(1 +R2/R1)
+Iadj * R2
(Iadj ignored)
J7
RASM722P
R23 POT_METER_500R
N.M
U5
LE35
IN
GND
OUT
VCC3.3
VBUS
LE33 or LM317 (as above)
may also be used.
Do not use together with U7
Optional R/C TX Power supply. for usb bus powered
chose diode with
forward currend >Iin
reverse voltage > 10V
VBUS
L2
6.8uH
D2
SCHOTTKY_SMD_12
ceramic
C4
2.2u
U2
Vin
SHDN
SW
GND
FB
LM2731
VCC9.5
R7
100k
R5
90k
VCC9.5 =
(R5/R6 + 1) * 1.23
Variable R5
recomended
C5
270p
C6
2.2u
tantal
low esr
R6
13.3k
VCC9.5 disabled by default
VCC9.5 ENAB
Enable required, because we're
not allowed enough mAmphs at first..
Optional switches
VCC3.3
R9
100k
SW1
ALPS SSSS212901
R13
27k
R12
36k
R8
51k
R16 0R
R21 0R
VCC3.3
D6
EL17-21SYGC
power
good
R19
75R
VCC3.3
J4
VCC
MISO
MOSI
SCK
GND
RESET
HEADER ISP
VCC3.3
D8
EL17-21USRC
R20
75R
USB LOW speed
Pull-up
VCC3.3
C16
100n
R10
1k5
VCC3.3
R15
100k
SW2
Switch SPDT
R14
100k
C14
22p
C13
22p
XC2
12MHz
VCC3.3
C15
100n
U8
VCC
PB0
PB1
PB3
PB2
PA7
PA6
GND
PA0
PA1
PA2
PA3
PA4
PA5
ATtiny84
RST
USB_DP
RC_TX_Filt
MOSI
STATUS_LED
SCK
MISO
VCC9.5 ENAB
USB_DP
USB_DN
DN should ideally be on PA0
VBUS
USB_A_CONNECTOR
Shield
GND
D+
D-
VBUS
J6
VCC9.5
J2
mini-DIN4
RC_TX
R22
28k
R11
50k
N.M
C17
820p
Filter.
1: RC_TX is aprox. 5V, need 3.3
2: It contains ugly noise
USB sampling at PB1, SOF detection at INT0
USB_DP
TRI DESIGN
RC Simulator Cable
Size
Sheet 1 of 1
Rev PA4
Date Thursday, February 01, 2007